ARTE LAMP

ASSEMBLY INSTRUCTION

ИНСТРУКЦИЯ
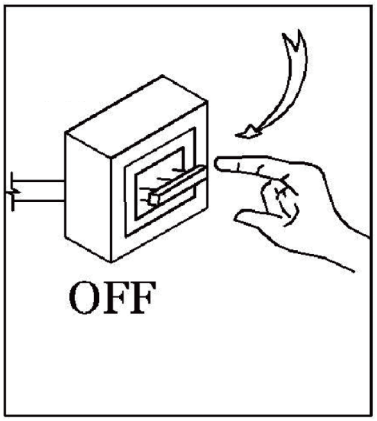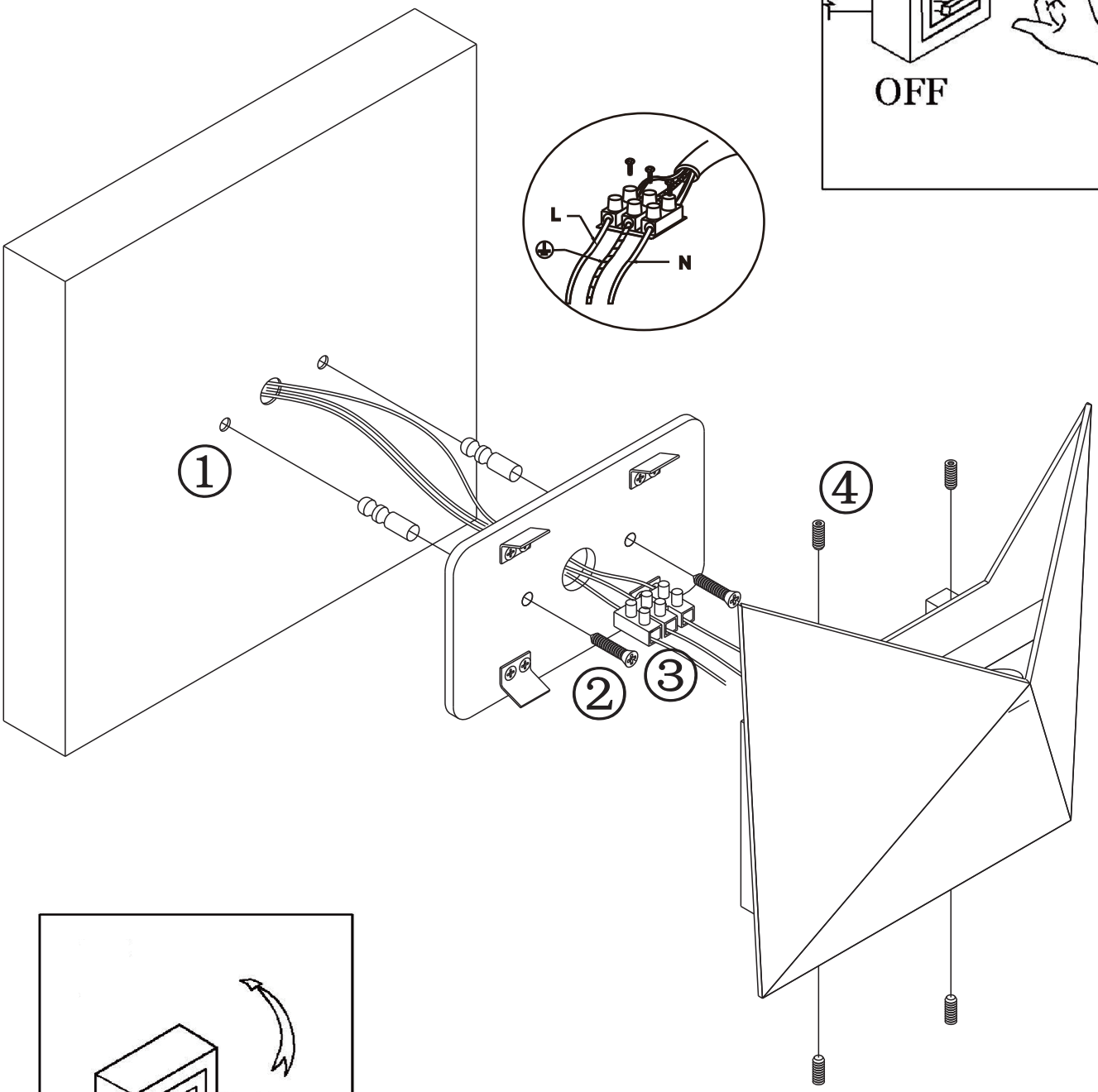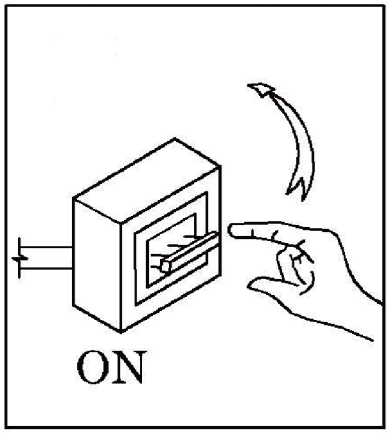
A1609AP-1GY
A1609AP-1WH