ARTE LAMP

ASSEMBLY INSTRUCTION
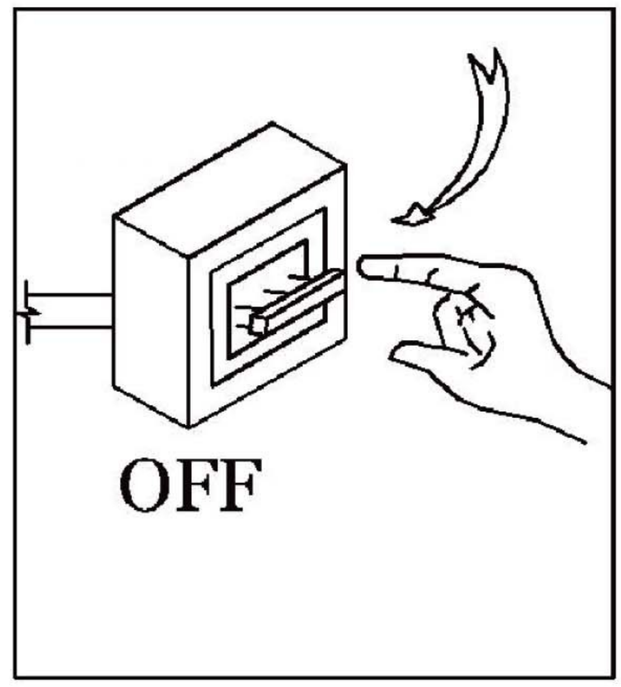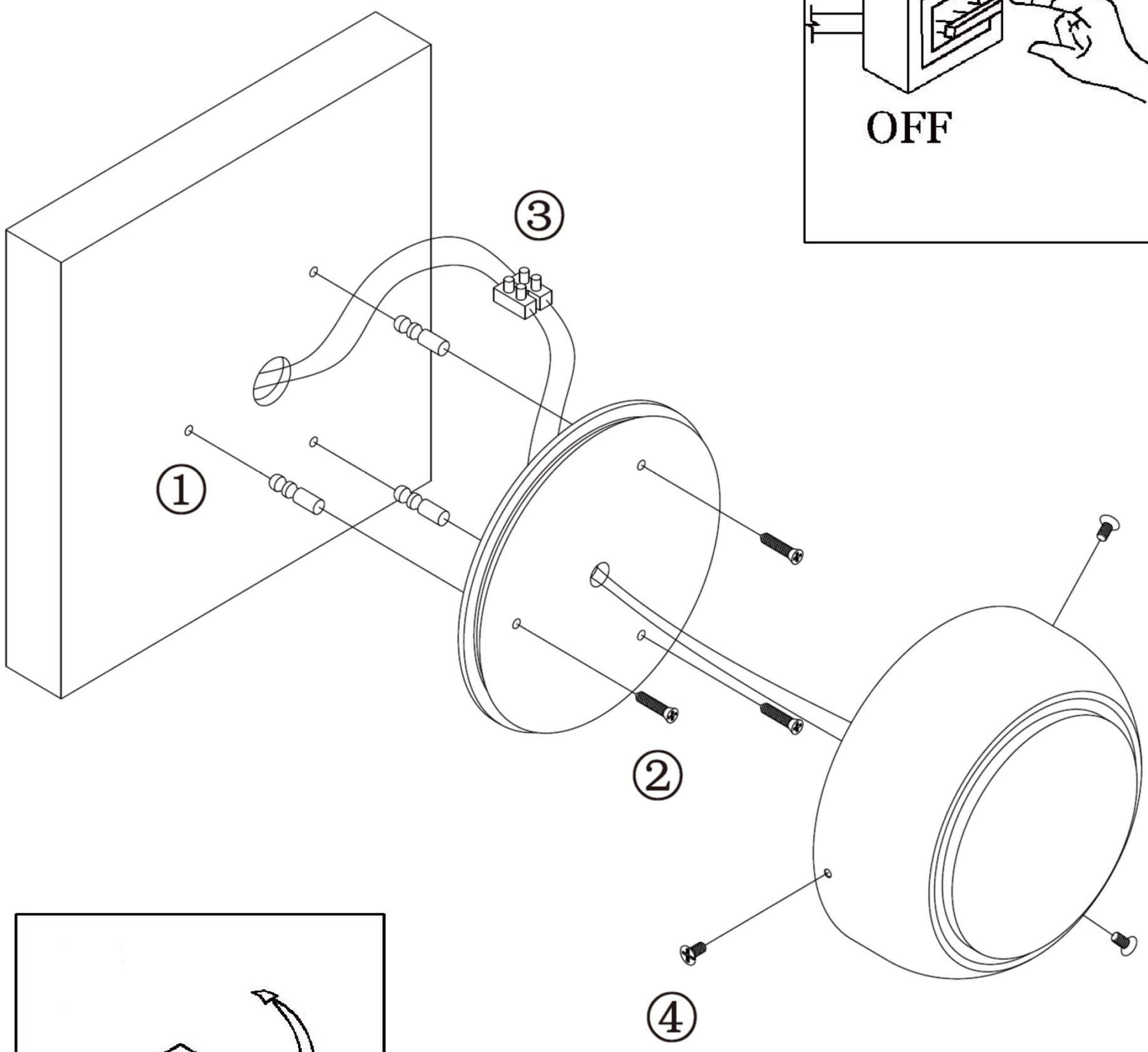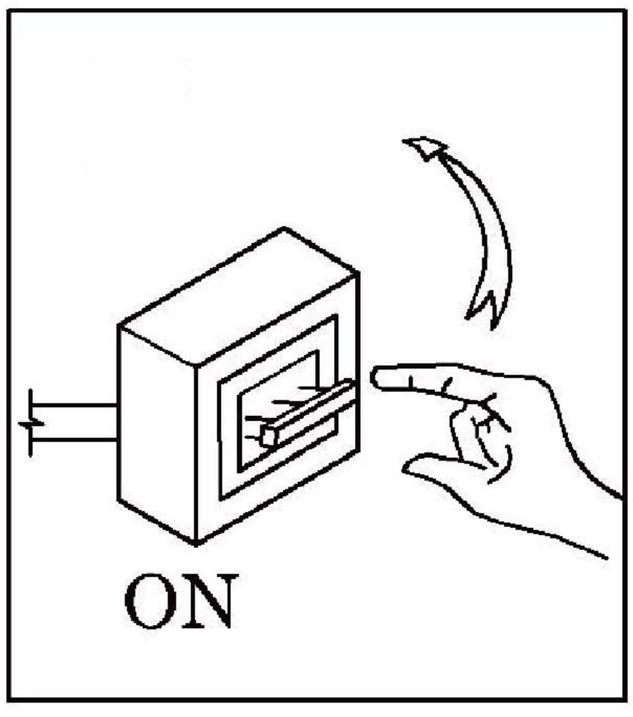
ИНСТРУКЦИЯ A1421AP-1WH