ARTE LAMP

ASSEMBLY INSTRUCTION

A8132SP-1GR

CE

ИНСТРУКЦИЯ

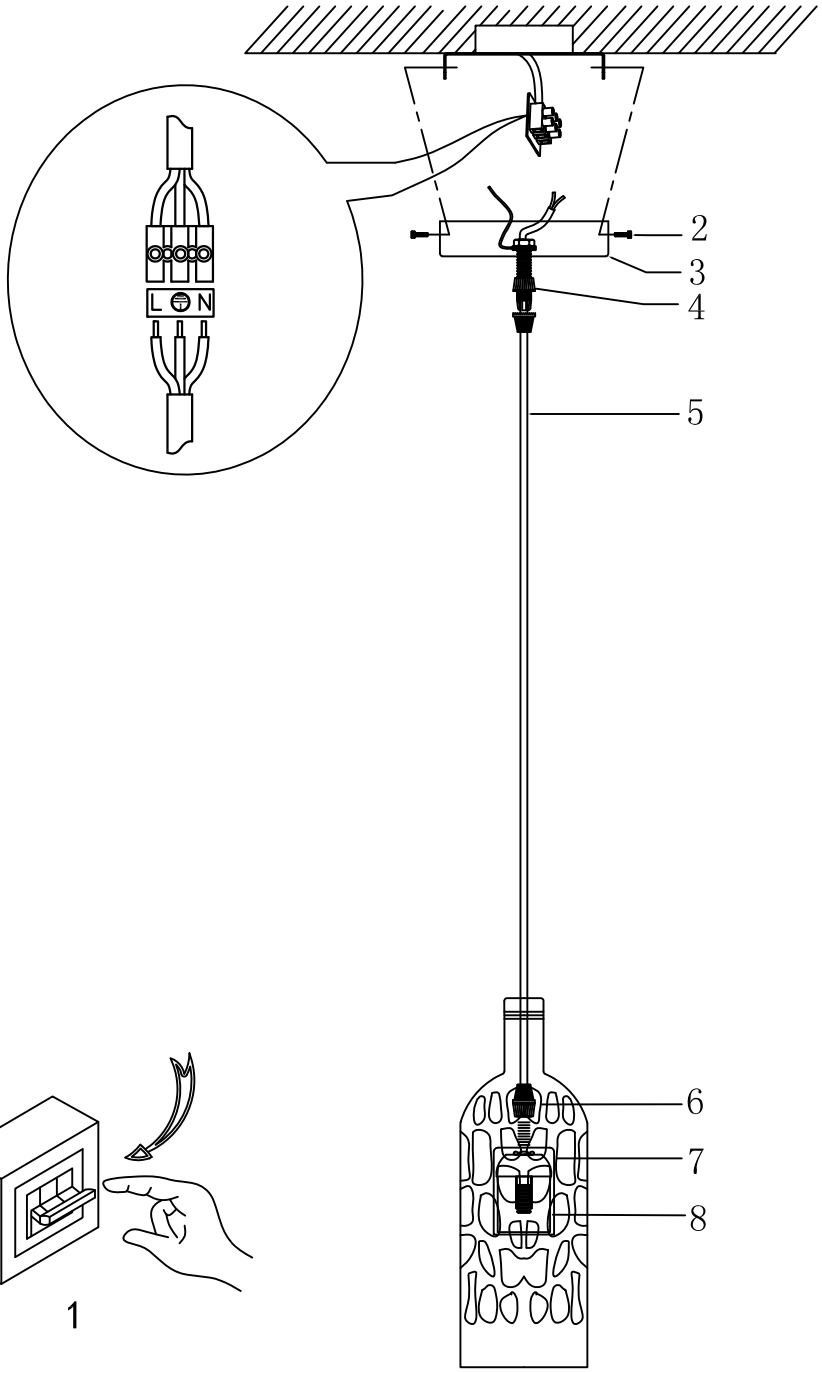

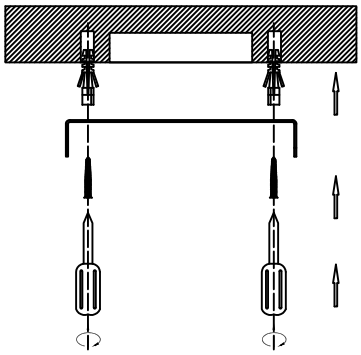

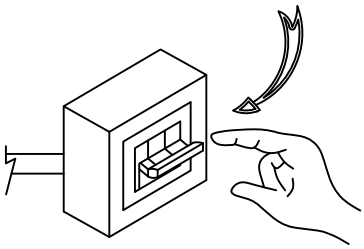

OFF 1

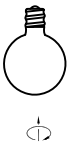

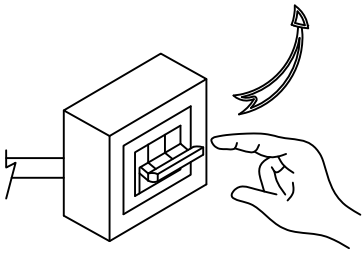

ON 9