ARTE LAMP

ASSEMBLY INSTRUCTION

ИНСТРУКЦИЯ

A5358AP-1WG

OFF

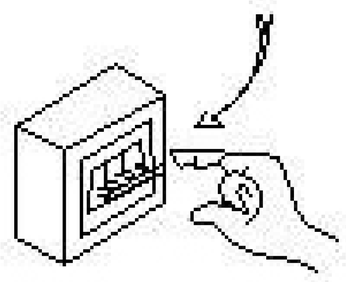

1

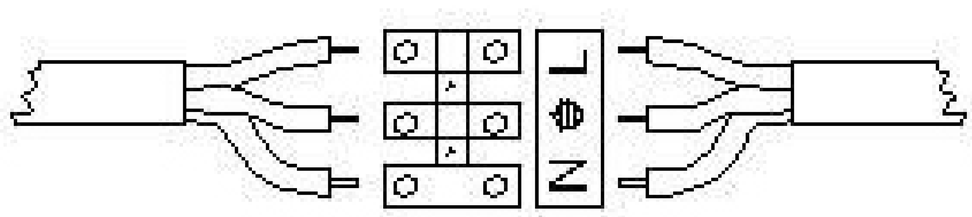

4

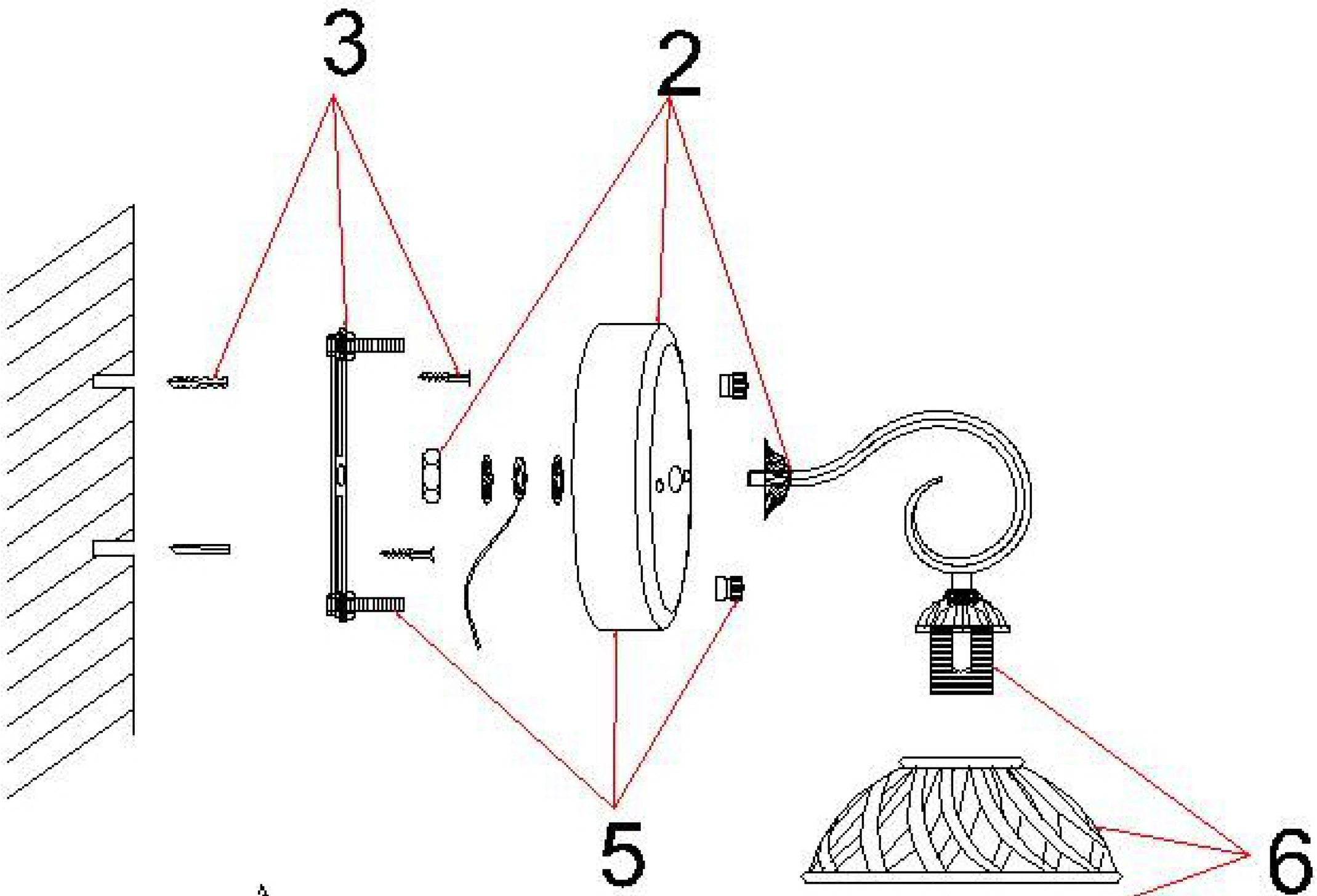

ON

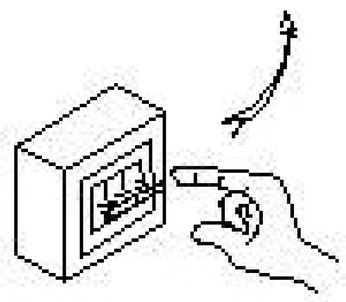

8