ARTE LAMP

ASSEMBLY INSTRUCTION
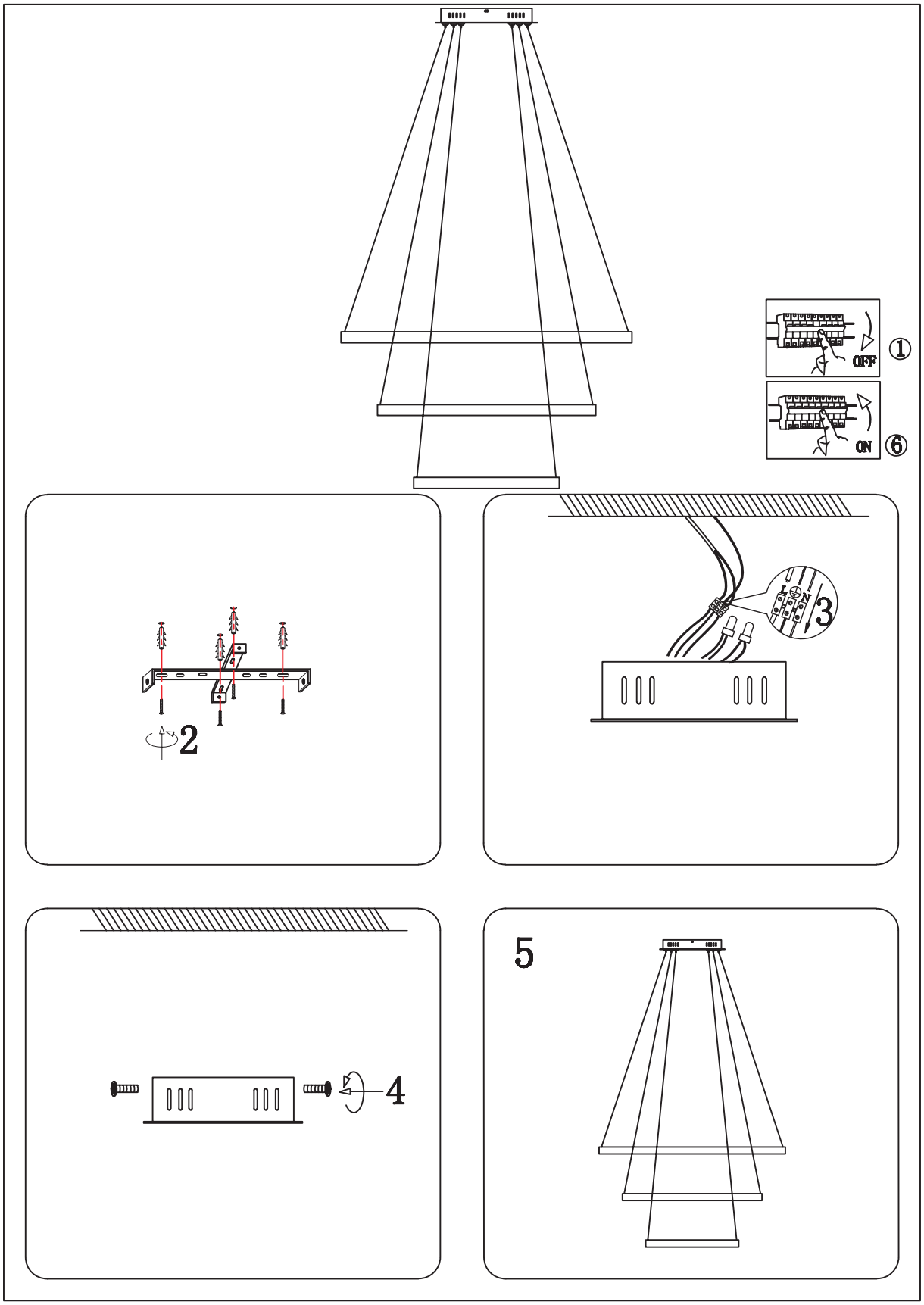
ИНСТРУКЦИЯ A2182SP-160PB