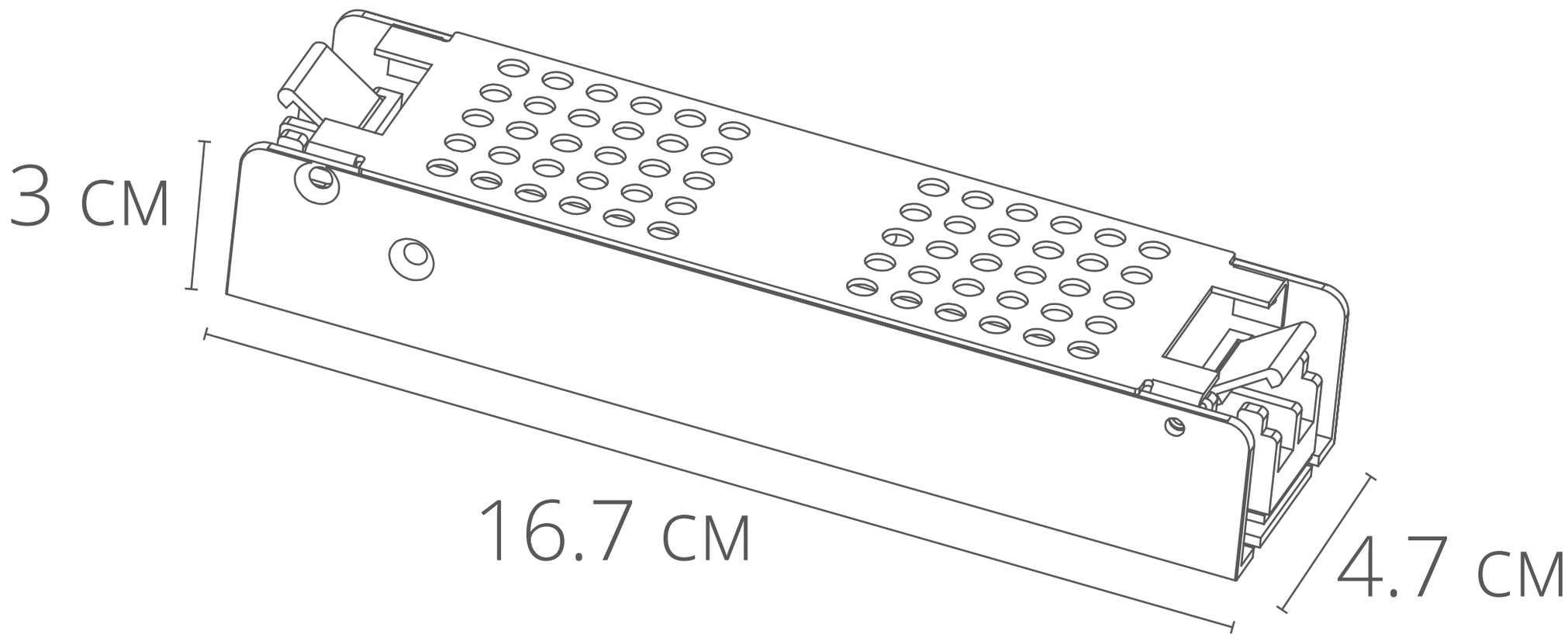
3 CM
16.7 CM
4.7 CM