ARTE LAMP

ASSEMBLY INSTRUCTION

ИНСТРУКЦИЯ
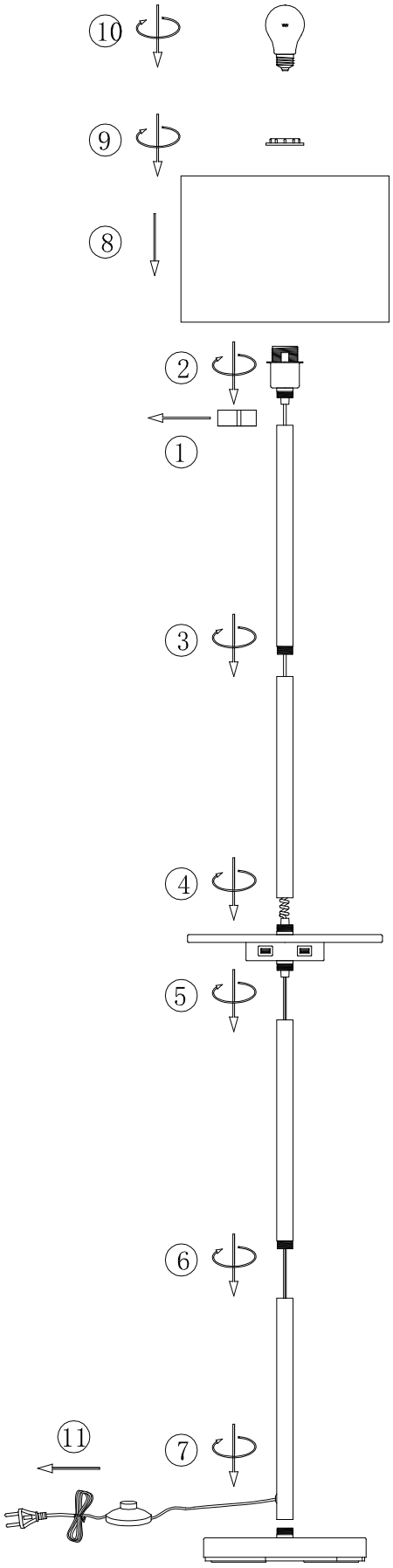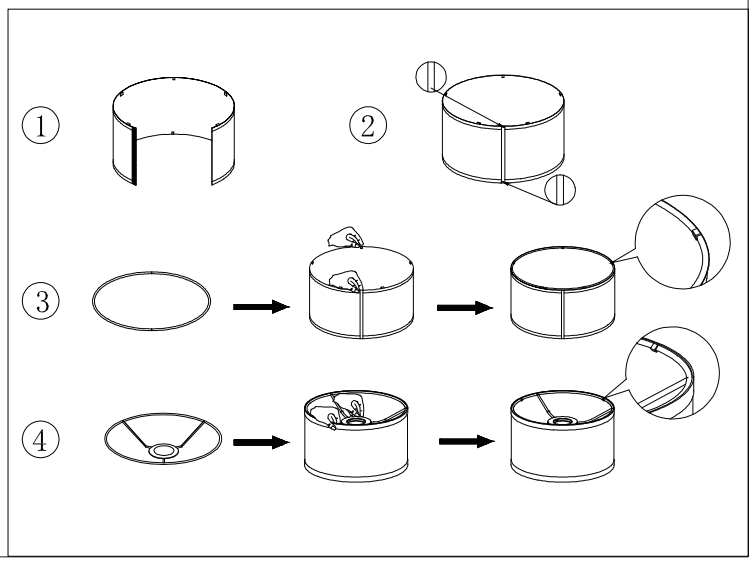
A4056PN-1WH